Summer Packet for Incoming 5th Grade

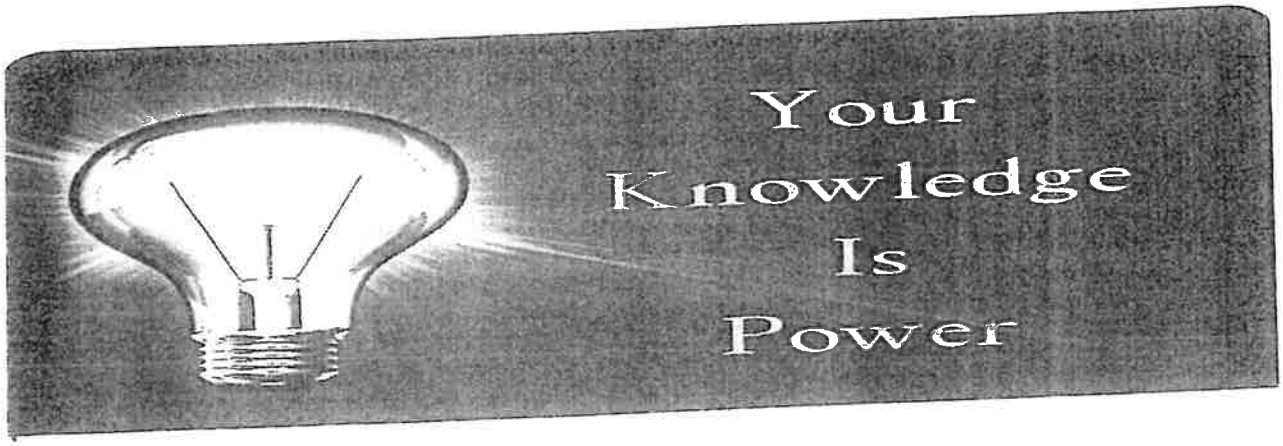

All work is mandatory and is to be turned in the 1st week of school by Friday.

Name: _____

Multiplication

Find the products.

a. 452 × 36

b. 986 × 24

c. 745 × 19

d. 367 × 58

e. 892 × 47

f. 603 × 95

g. 286 × 73

h. 847 × 62

i. 594 × 86

j. 978 × 69

k. Charlie is training to run a marathon. Every day he puts on his sneakers and runs 12 miles. Charlie never misses a day. How many miles does Charlie run in one full year, or 365 days?

answer: _____

Multiply in columns - 2 digit by 3 digit

Grade 4 Multiplication Worksheet

Find the product.

1. 868×62 = _____

2. 995×55 = _____

3. 329×17 = _____

4. 749×11 = _____

5. 188×31 = _____

6. 671×51 = _____

7. 317×86 = _____

8. 807×54 = _____

9. 376×70 = _____

© www.k5learning.com

Name: _____ Date: _____

Division Worksheet

1 a. 8) 4 0 0	1 b. 3) 2 7 9	1 c. 2) 1 2 6
2 a. 6) 4 7 4	2 b. 3) 7 8 3	2 c. 2) 4 4 4
3 a. 7) 3 6 4	3 b. 4) 4 9 6	3 c. 2) 6 8 6

Long Division with remainders within 1-1,000

Grade 4 Division Worksheet

Find the quotient with remainder.

1. $7\overline{)716}$

2. $8\overline{)511}$

3. $7\overline{)804}$

4. $4\overline{)720}$

5. $4\overline{)126}$

6. $5\overline{)175}$

7. $8\overline{)558}$

8. $7\overline{)201}$

9. $4\overline{)858}$

© www.k5learning.com

Comparing proper & improper fractions and mixed numbers

Grade 4 Fractions Worksheet

Example: 2/3 > 1/6 or 3/4 < 9/8

Write ">", "=" or "<" to compare the fractions.

1. $1\frac{6}{8}$ ___ $2\frac{58}{100}$
2. $\frac{18}{30}$ ___ $\frac{15}{150}$
3. $1\frac{4}{25}$ ___ $1\frac{3}{6}$
4. $\frac{60}{80}$ ___ $2\frac{1}{2}$
5. $\frac{5}{4}$ ___ $\frac{3}{10}$
6. $\frac{34}{18}$ ___ $1\frac{2}{3}$
7. $\frac{43}{16}$ ___ $2\frac{2}{12}$
8. $\frac{3}{6}$ ___ $1\frac{16}{18}$
9. $\frac{7}{4}$ ___ $2\frac{11}{25}$
10. $2\frac{1}{2}$ ___ $\frac{20}{16}$
11. $\frac{17}{20}$ ___ $\frac{3}{5}$
12. $\frac{4}{6}$ ___ $1\frac{1}{8}$
13. $\frac{75}{50}$ ___ $\frac{112}{100}$
14. $\frac{8}{12}$ ___ $2\frac{9}{10}$
15. $2\frac{1}{3}$ ___ $\frac{29}{16}$
16. $2\frac{2}{6}$ ___ $\frac{43}{50}$
17. $\frac{17}{10}$ ___ $2\frac{1}{18}$
18. $2\frac{10}{25}$ ___ $\frac{6}{24}$

© www.k5learning.com

Name : _____ Score : _____

Teacher : _____ Date : _____

Subtracting Fractions

1) $\frac{4}{5} - \frac{1}{10} =$

2) $\frac{3}{4} - \frac{1}{3} =$

3) $\frac{2}{3} - \frac{1}{5} =$

4) $\frac{3}{4} - \frac{1}{2} =$

5) $\frac{6}{10} - \frac{1}{3} =$

6) $\frac{4}{5} - \frac{3}{4} =$

7) $\frac{2}{4} - \frac{1}{10} =$

8) $\frac{2}{4} - \frac{1}{3} =$

9) $\frac{3}{10} - \frac{1}{4} =$

10) $\frac{2}{4} - \frac{1}{10} =$

11) $\frac{1}{2} - \frac{1}{5} =$

12) $\frac{2}{3} - \frac{3}{10} =$

13) $\frac{6}{10} - \frac{1}{2} =$

14) $\frac{1}{2} - \frac{4}{10} =$

15) $\frac{3}{5} - \frac{1}{3} =$

Math-Aids.Com
Fractions Worksheets

Convert fractions to decimals

Grade 4 Fractions Worksheet

Convert.

1. $\frac{7}{10}$ = _____
2. $\frac{11}{100}$ = _____
3. $\frac{4}{10}$ = _____
4. $\frac{80}{100}$ = _____
5. $\frac{18}{100}$ = _____
6. $\frac{3}{10}$ = _____
7. $\frac{6}{10}$ = _____
8. $\frac{56}{100}$ = _____
9. $\frac{36}{100}$ = _____
10. $\frac{46}{100}$ = _____
11. $\frac{9}{10}$ = _____
12. $\frac{7}{100}$ = _____
13. $\frac{86}{100}$ = _____
14. $\frac{2}{10}$ = _____
15. $\frac{52}{100}$ = _____
16. $\frac{69}{100}$ = _____
17. $\frac{5}{10}$ = _____
18. $\frac{67}{100}$ = _____
19. $\frac{72}{100}$ = _____
20. $\frac{32}{100}$ = _____
21. $\frac{23}{100}$ = _____

© www.k5learning.com

Mass & weight word problems (customary units)

Grade 4 Word Problems Worksheets

Read and answer each question:

1. A bag of flour weigh 3 lb. If a chef needs 15 lb. of flour, how many bags of flour should he buy?

2. Jack wants to make some cookies for his mother. The recipe says he would need 7 oz of flour for 1 batch of cookies. He wants to make 4 batches of cookies. How much flour does he needs?

3. Emily bought 1 lb. 4 oz. of ground beef for her mother for dinner, but her mother says she only needs 8 oz. of ground beef. How much extra beef did Emily buy?

4. The turkey is 19 lb. 12 oz. and the stuffing inside the turkey is 4 oz. What is the total weight of the roasted turkey?

5. A bar of butter weighs 20 oz. A box of butter weighs 2 lb. 4 oz. Which one is heavier?

6. The recipe for shortbread needs 12 oz. flour and 0.5 lb. sugar. The recipe for cupcake needs 15 oz. flour and 5 oz. sugar. Which recipe needs more sugar?

Convert between yards, feet and inches

Grade 4 Measurement Worksheet

Note: 1 yard (yd) = 3 feet (ft); 1 foot = 12 inches (in)

Example: 18 in = 1 ft 6 in

Convert the given measures to new units.

1. 35 ft = _____ in
2. 60 in = _____ ft
3. 74 in = _____ yd
4. 36 yd = _____ in
5. 78 in = _____ yd
6. 41 ft = _____ yd
7. 82 yd = _____ ft
8. 8 ft = _____ yd
9. 81 in = _____ yd
10. 94 ft = _____ in
11. 79 yd = _____ ft
12. 96 in = _____ yd
13. 3 yd = _____ ft
14. 65 ft = _____ yd
15. 70 ft = _____ yd
16. 85 ft = _____ in
17. 41 ft = _____ in
18. 17 yd = _____ in
19. 7 yd = _____ ft
20. 66 in = _____ yd

K5 Learning

Metric units of length

Grade 4 Measurement Worksheet

1. Which unit would you use to measure the length of a bath tub?
   a. millimeters
   b. centimeters
   c. meters
   d. kilometers

2. Which unit would you use to measure the distance between two cities?
   a. millimeters
   b. centimeters
   c. meters
   d. kilometers

3. Which unit would you use to measure the thickness of a magazine?
   a. millimeters
   b. centimeters
   c. meters
   d. kilometers

4. Which unit would you use to measure the width of a door?
   a. millimeters
   b. centimeters
   c. meters
   d. kilometers

5. Which unit would you use to measure the length of your arm?
   a. millimeters
   b. centimeters
   c. meters
   d. kilometers

6. Which unit would you use to measure the length of an ant?
   a. millimeters
   b. centimeters
   c. meters
   d. kilometers

7. Which unit would you use to measure the height of a building?
   a. millimeters
   b. centimeters
   c. meters
   d. kilometers

Printable Protractor

Cut out each protractor along the dashed line.
Leave the point in the center to line up the vertex of the angle.

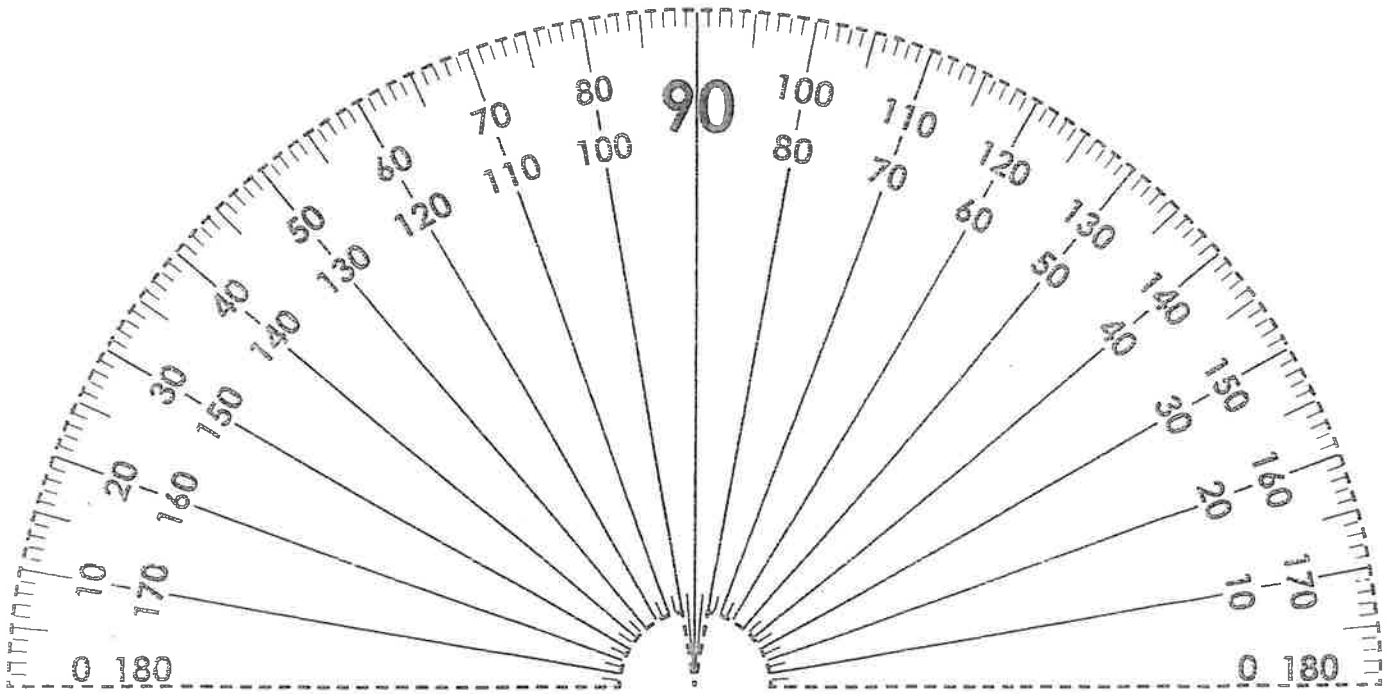

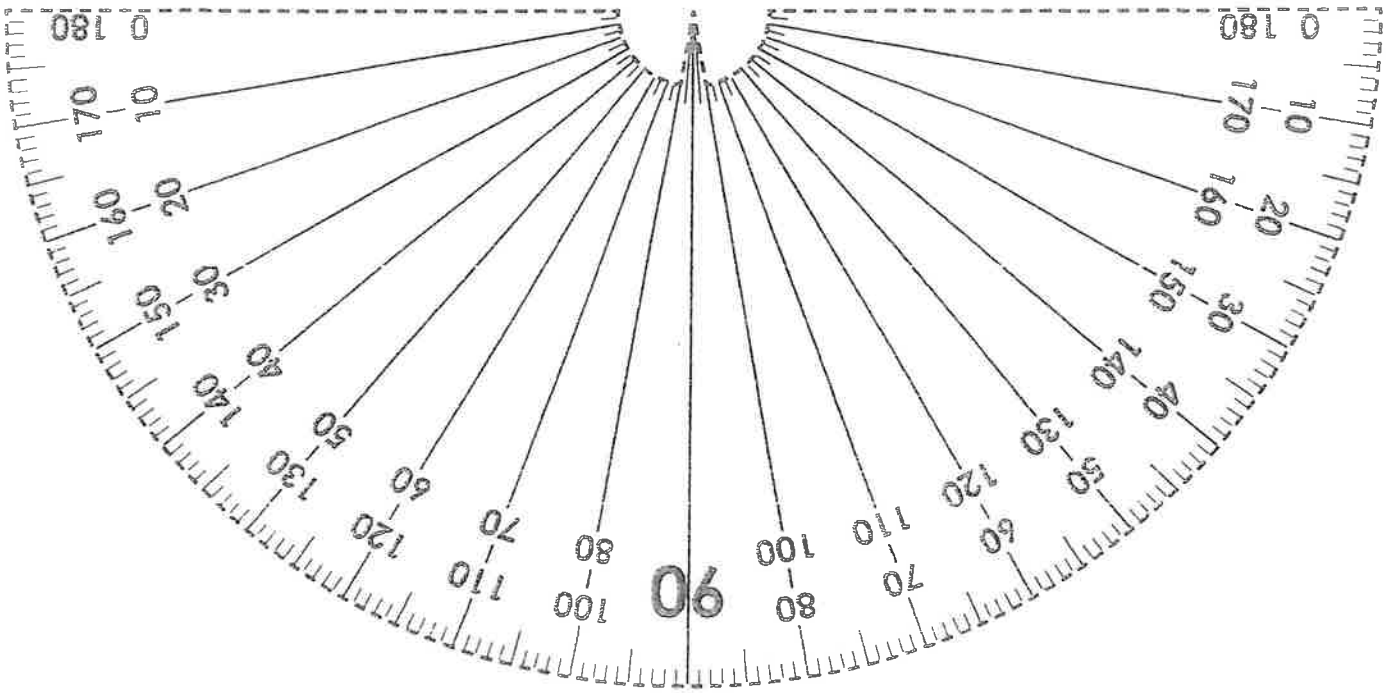

Name : _____

Inner scale: S1

Measuring Angles - 5° Increments

Measure each angle using a protractor.

1)

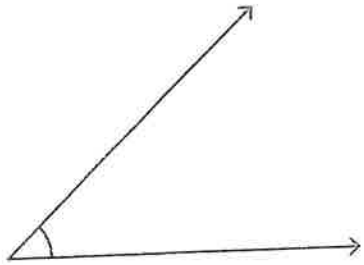

Angle: _____

2)

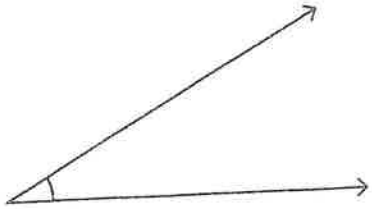

Angle: _____

3)

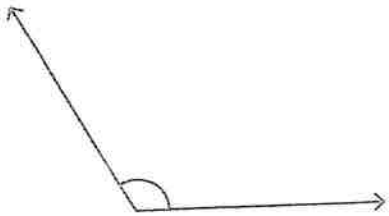

Angle: _____

4)

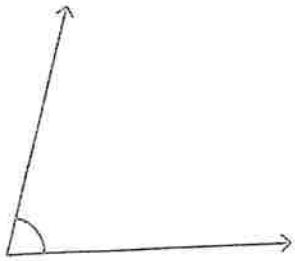

Angle: _____

5)

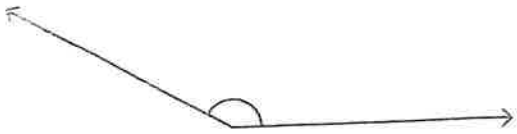

Angle: _____

6)

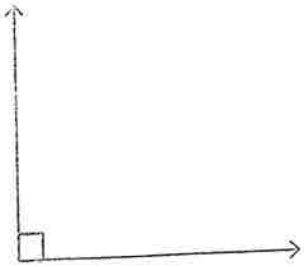

Angle: _____

7)

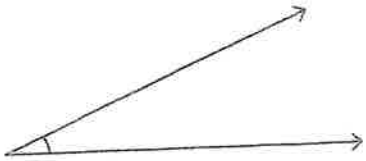

Angle:

8)

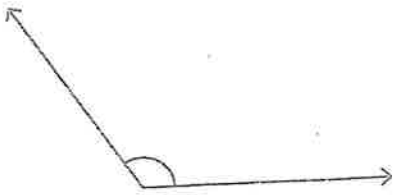

Angle:

Name: _____ Date: _____

Classify Triangles Worksheet

Classify the triangles by their sides (equilateral, isosceles, scalene).

1 a. 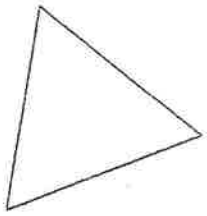	1 b. 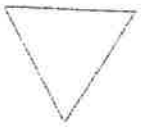	1 c.
2 a. 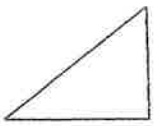	2 b. 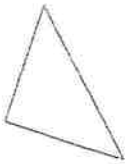	2 c. 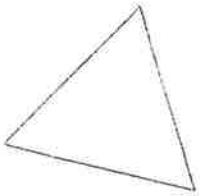
3 a. 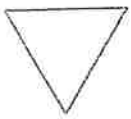	3 b.	3 c.
4 a.	4 b.	4 c. 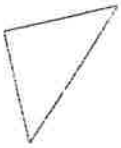
5 a. 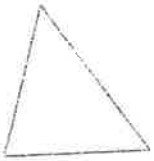	5 b. 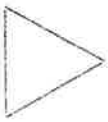	5 c. 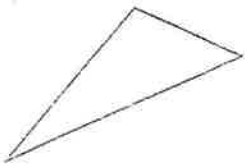

Name: Date:

Perimeter and Area

What do you call a happy mushroom? A Fun-Guy!

Using the given measurements, find the area and perimeter of each rectangle.

www.atozteacherstuff.com

1

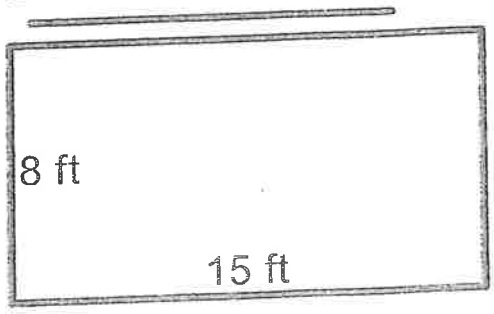

2

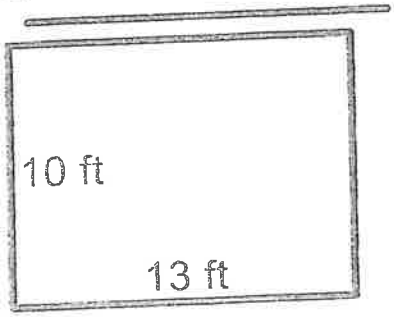

3

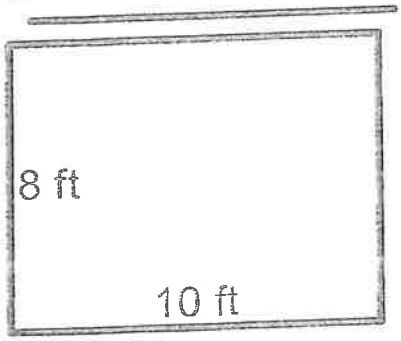

4

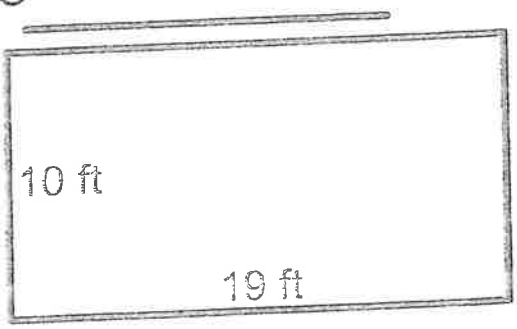

5

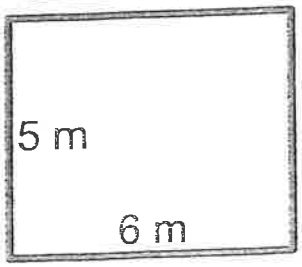

6

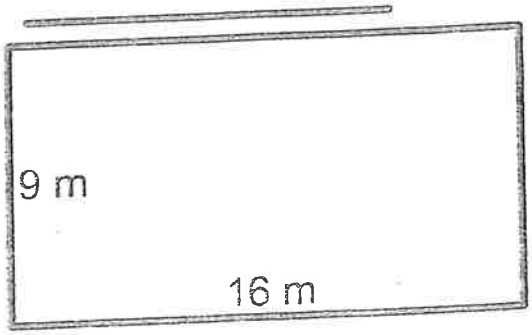

Score:

© A to Z Teacher Stuff, LLC * www.atozteacherstuff.com

Mixed operations word problems

Grade 4 Word Problems Worksheets

Read and answer each question.

There are 4 doctors working in a clinic. Each doctor has 2 nurses assisting them. There are two receptionists, Jay and Molly, working at the reception.

1. How many people are working in the clinic?

2. On Monday, 23 patients made appointments with each doctor. However, 6 of the patients did not show up. How many patients visited the clinic on Monday?

3. On Tuesday, Jay answered 45 phone calls and Molly answered 12 more calls than Jay did. How many calls were answered in total?

4. On Wednesday, a doctor called in sick. The two nurses and Jay called 36 patients to reschedule their appointments. How many calls did they each make?

5. Among the calls they made, 13 of the patients decided to cancel their appointments and the rest decided to postpone their appointments. How many appointments were postponed?

6. Write an equation using "x" and then solve the equation.
For each patient they see, each doctor can get paid $80. If there are x patients on that day, the doctor will be paid $1760.

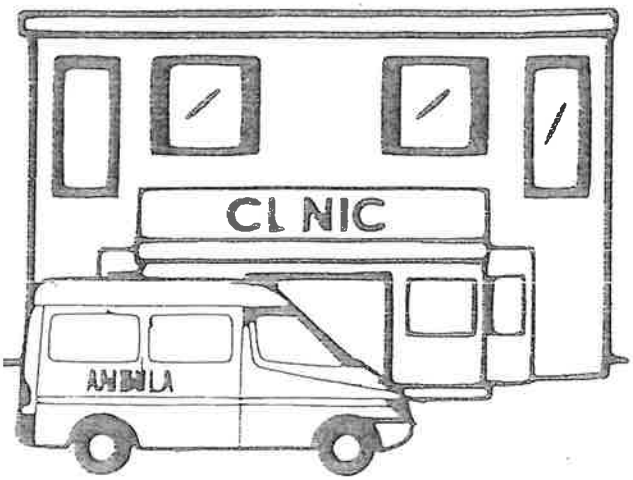

Adding fractions (like denominators)

Grade 4 Fractions Worksheet

Find the sum.

1. $\frac{14}{15} + \frac{10}{15} =$ _____
2. $\frac{72}{100} + \frac{11}{100} =$ _____
3. $\frac{8}{10} + \frac{2}{10} =$ _____
4. $\frac{1}{3} + \frac{1}{3} =$ _____
5. $\frac{1}{2} + \frac{1}{2} =$ _____
6. $\frac{24}{25} + \frac{11}{25} =$ _____
7. $\frac{1}{6} + \frac{5}{6} =$ _____
8. $\frac{3}{5} + \frac{2}{5} =$ _____
9. $\frac{2}{14} + \frac{1}{14} =$ _____
10. $\frac{1}{12} + \frac{10}{12} =$ _____
11. $\frac{1}{9} + \frac{1}{9} =$ _____
12. $\frac{4}{15} + \frac{1}{15} =$ _____
13. $\frac{5}{50} + \frac{39}{50} =$ _____
14. $\frac{2}{8} + \frac{5}{8} =$ _____
15. $\frac{19}{20} + \frac{15}{20} =$ _____
16. $\frac{1}{4} + \frac{2}{4} =$ _____
17. $\frac{11}{13} + \frac{12}{13} =$ _____
18. $\frac{10}{11} + \frac{9}{11} =$ _____
19. $\frac{5}{16} + \frac{15}{16} =$ _____
20. $\frac{2}{7} + \frac{1}{7} =$ _____
21. $\frac{6}{16} + \frac{8}{16} =$ _____

© www.k5learning.com

Subtracting fractions (like denominators)

Grade 4 Fractions Worksheet

Find the difference.

1. $\frac{7}{12} - \frac{6}{12} =$ _____
2. $\frac{5}{10} - \frac{2}{10} =$ _____
3. $\frac{5}{7} - \frac{4}{7} =$ _____
4. $\frac{3}{4} - \frac{1}{4} =$ _____
5. $\frac{5}{9} - \frac{2}{9} =$ _____
6. $\frac{4}{8} - \frac{2}{8} =$ _____
7. $\frac{2}{3} - \frac{1}{3} =$ _____
8. $\frac{4}{5} - \frac{3}{5} =$ _____
9. $\frac{9}{12} - \frac{8}{12} =$ _____
10. $\frac{2}{4} - \frac{1}{4} =$ _____
11. $\frac{7}{10} - \frac{6}{10} =$ _____
12. $\frac{8}{9} - \frac{5}{9} =$ _____
13. $\frac{4}{6} - \frac{2}{6} =$ _____
14. $\frac{6}{8} - \frac{4}{8} =$ _____
15. $\frac{3}{5} - \frac{2}{5} =$ _____
16. $\frac{6}{7} - \frac{1}{7} =$ _____
17. $\frac{7}{11} - \frac{5}{11} =$ _____
18. $\frac{5}{6} - \frac{3}{6} =$ _____
19. $\frac{8}{9} - \frac{4}{9} =$ _____
20. $\frac{6}{8} - \frac{5}{8} =$ _____
21. $\frac{9}{12} - \frac{2}{12} =$ _____

© www.k5learning.com

Convert between yards, feet and inches

Grade 4 Measurement Worksheet

Note: 1 yard (yd) = 3 feet (ft); 1 foot = 12 inches (in)

Example: 18 in = 1 ft 6 in

Convert the given measures to new units.

1. 5 ft = _____ in
2. 4 yd = _____ ft
3. 79 yd = _____ in
4. 4 in = _____ yd
5. 75 yd = _____ in
6. 30 ft = _____ yd
7. 8 in = _____ yd
8. 8 ft = _____ yd
9. 3 in = _____ ft
10. 93 in = _____ yd
11. 2 yd = _____ in
12. 3 ft = _____ in
13. 14 yd = _____ ft
14. 84 ft = _____ yd
15. 47 in = _____ yd
16. 39 yd = _____ in
17. 53 yd = _____ in
18. 25 ft = _____ in
19. 69 ft = _____ yd
20. 5 yd = _____ ft

Convert between cups, pints, quarts & gallons

Grade 4 Measurement Worksheet

Note: 1 gallon (gal) = 4 quarts (qt) = 8 pints (pt) = 16 cups (c)

Example: 11 pt = 5 qt 1 pt

Convert the given measures to new units.

1. 19 pt = _____ gal
2. 15 qt = _____ gal
3. 13 gal = _____ c
4. 7 gal = _____ qt
5. 7 pt = _____ qt
6. 18 gal = _____ c
7. 5 gal = _____ qt
8. 12 gal = _____ qt
9. 6 pt = _____ gal
10. 11 c = _____ gal
11. 1 qt = _____ c
12. 11 gal = _____ pt
13. 7 c = _____ gal
14. 5 qt = _____ gal
15. 16 qt = _____ c
16. 4 c = _____ gal
17. 14 qt = _____ pt
18. 5 c = _____ qt

© www.k5learning.com

Hello All Incoming Fifth Graders!

This summer we would like you to read a book called The War with Grandpa by author Robert Kimmell Smith. We hope you will enjoy it! The boy in the story is your age.

About the Novel:
The War with Grandpa is a story about a young boy and his grandfather at odds. 10-year-old Peter Stokes loves his grandfather and is excited to learn that he will be coming to live with the family. That is, until he learns that grandpa will be taking over his bedroom. Peter's two best friends encourage Peter to stand his ground and do something about this injustice. Peter soon declares war on his grandfather, who proves to be an even match. The two attack and counterattack each other until escalations lead to one finally surrendering.

You can purchase a "real" paper book or download a PDF version, whichever works best for you and your parents.

Attached are a few worksheets for you to complete. Nothing you can't handle as an incoming 5th grader!

Have a great summer and we look forward to seeing you in September!

Mrs. Walsh and Ms. Laphan
St. Rose of Lima 5th grade teachers

After You Read

NAME: _____

Chapters One to Three

1. Circle T if the statement is TRUE or F if it is FALSE.

T F a) Mrs. Klein thinks students should write about what's "true and real".

T F b) Peter always writes very short sentences.

T F c) Jennifer found out Grandpa was coming to live with them before Peter knew.

T F d) Jennifer told Peter the "secret" about where Grandpa's room would be.

T F e) Peter has had the same bedroom all of his life.

T F f) Peter doesn't really mind giving up his room to his Grandpa.

2. Number the events from 1 to 6 in the order they happened in these Chapters.

( ) a) Peter decided to write a story. It is about when his Grandpa came to live with them.

( ) b) Jennifer came into Peter's room. She looked like she knew a secret.

( ) c) Peter decided he would not give up his room.

( ) d) Peter will have a new bedroom. It will be on the third floor of their house.

( ) e) Jenny told Peter that Grandpa was coming to live with them.

( ) f) Jennifer said, "Grandpa was too lonely in Florida so he sold his house."

© CLASSROOM COMPLETE PRESS

NAME: _____

After You Read

Chapters Four to Seven

1. **Put a check mark (✓) next to the answer that is most correct.**

a) Why didn't Peter go running off to his parents about the news Grandpa was coming?

- ○ A They would get mad at him.
- ○ B Jennifer told them Peter knew the secret.
- ○ C He believed in letting bad news come to him instead of looking for it.
- ○ D He was too angry to talk about it.

b) Why was Peter silent after hearing the news?

- ○ A He was thinking about a new book he was reading.
- ○ B He was waiting to be excused so he could go out and play.
- ○ C He didn't want to interrupt his parents.
- ○ D He was waiting for his parents to tell him about his room.

c) Why couldn't Jennifer move out of her room?

- ○ A The guest room is too small for her.
- ○ B She is little and needs more looking after than Peter.
- ○ C She would be too lonely upstairs.
- ○ D All of her stuffed animals won't fit into another room.

d) What does Peter store in his toy cabinets?

- ○ A Board games, crayons, baseball glove.
- ○ B Board games, crayons, skates.
- ○ C Board games, crayons, coloring books.
- ○ D Board games, crayons, books to read.

e) What was the last thing to move out of Peter's room?

- ○ A His trophies.
- ○ B His summer clothes.
- ○ C His bookcase and books.
- ○ D His bed.

2318 © CLASSROOM COMPLETE PRESS

NAME: _____

After You Read

Chapters Eight to Twelve

Answer each question with a complete sentence.

1. What makes going to the upstairs room so scary? Give 3 details from the story.

_____

_____

_____

2. Explain in your own words the quote, "Be still my heart."

_____

_____

3. Peter recalls a picture of John Paul Jones saying, "I have just begun to fight!" What idea does Peter get from this?

_____

4. Why did Peter's grandparents move to Florida? Why was Grandpa now coming to live with Peter's family?

_____

_____

5. Explain in your own words the quote, "Only a dope will mope." Give examples of how Grandpa is 'moping'.

_____

_____

Journaling Prompt

In these Chapters, we read that Peter's friends are quick to tell him what to do about the problem with Grandpa. In your opinion, did they give Peter good advice? Why? Have you ever had friends give you advice that didn't turn out for the best? Explain your situation. Why are we so quick to listen to our friends' opinions?

NAME: _____

After You Read

Chapters Thirteen to Sixteen

1. Circle T if the statement is TRUE or F if it is FALSE.

T F a) Peter had the idea of a war from reading about one.

T F b) Peter gave his note about a war to Grandpa.

T F c) Peter gave his note about a war to Grandpa in person.

T F d) Jenny almost caught Peter. He was leaving the note in Grandpa's room.

T F e) Peter hid the note under Grandpa's pillow.

T F f) Peter's friends thought that leaving a note was a good way to start a war.

2. Number the events from 1 to 7 in the order they happened in these Chapters.

( ) a) Peter sent Grandpa a note. He told him why he wanted to start a war.

( ) b) Peter sneaked upstairs to leave the note in Grandpa's room.

( ) c) Grandpa pretended he did not get the note.

( ) d) Peter tried to ask Grandpa about the note.

( ) e) Peter typed his note about the war. He wanted to trick Grandpa.

( ) f) Jenny almost caught Peter. He was trying to leave the note in Grandpa's room.

( ) g) Peter's friends want him to start fighting for real.

© CLASSROOM COMPLETE PRESS

NAME: _____

Chapters Seventeen to Twenty

1. Put a check mark (✓) next to the answer that is most correct.

a) Why did Peter think he wouldn't be able to sleep that night?

- ○ **A** His radio was playing too loudly.
- ○ **B** He was watching a good show on TV.
- ○ **C** He would be thinking about his next plan.
- ○ **D** His parents were talking too much.

b) What time did Peter set Grandpa's alarm to?

- ○ **A** Three o'clock in the morning.
- ○ **B** Three o'clock in the afternoon.
- ○ **C** Two o'clock in the morning.
- ○ **D** Four o'clock in the morning.

c) What does "flag of truce" mean?

- ○ **A** Making a flag for a clubhouse.
- ○ **B** When two warring parties want to meet and talk things out.
- ○ **C** When both sides agree to carry on the war.
- ○ **D** When both sides refuse to speak to each other.

d) "Single-minded," he said, "just like your mother." What does this mean?

- ○ **A** You don't worry about a single thing.
- ○ **B** You think of one thing at a time.
- ○ **C** You are only thinking about yourself and the one thing you want.
- ○ **D** You don't listen to other people.

e) What was Peter's next attack?

- ○ **A** To hide Grandpa's glasses.
- ○ **B** To mess up Grandpa's bed.
- ○ **C** To hide Grandpa's newspaper.
- ○ **D** To steal Grandpa's slippers.

NAME: _____

After You Read

Chapters Twenty-one to Twenty-three

1. Circle T if the statement is TRUE or F if it is FALSE.

T F a) Steve thought that Grandpa's kiss was a trick.

T F b) Peter agreed to burn Grandpa's slippers.

T F c) Grandpa wanted to go for a walk. He wanted to talk to Peter.

T F d) Grandpa slapped Peter across his cheek.

T F e) Peter started to cry and gave up after Grandpa slapped him.

T F f) That night no one was speaking to each other.

2. Number the events from 1 to 7 in the order they happened in these Chapters.

( ) a) Jenny showed the family her ballet dance.

( ) b) Peter said he won't forgive Grandpa and he won't quit the war.

( ) c) Billy told Peter that Grandpa is messing with his mind.

( ) d) Grandpa told Peter that there was a better way to settle arguments.

( ) e) Grandpa told jokes at dinner that night.

( ) f) Grandpa slapped Peter across the cheek.

( ) g) Grandpa asked Peter to go for a walk with him.

© CLASSROOM COMPLETE PRESS

NAME: _____

After You Read

Chapters Twenty-four to Twenty-six

Answer each question with a full sentence.

1. Peter thought he was listening to his friends too much. What did he decide to do?

_____

_____

2. What did the boys discover when they got out the Monopoly game? Who played the trick on them, and how did they know that?

_____

_____

3. Peter wanted to talk to Grandpa as soon as his friends left. Why wasn't he able to do this?

_____

_____

4. Explain what Grandpa means when he says, "Got my old pizzazz back, I think."

_____

5. What did Grandpa do before he retired? How is this helpful in Peter's household?

_____

_____

Journaling Prompt

Peter has stopped listening to his friends and started defending his Grandpa. Describe a time where you ignored your friends' advice and followed your own. Explain why you didn't listen to your friends and made the choices you did. Describe how the situation turned out. What did you learn from this? How did it affect other people?

NAME: _____

After You Read

Chapters Twenty-seven to Thirty

Put a check mark (✓) next to the answer that is most correct.

1. **a)** Why did Grandpa say they needed to get up very early to go fishing?

○ **A** "You have to get up pretty early to outsmart a flounder."
○ **B** "You can only catch flounder in the dark."
○ **C** Grandpa wanted to be home by lunchtime.
○ **D** They need time to clean their catch.

b) What was the next trick Peter played on Grandpa?

○ **A** He burned Grandpa's underwear.
○ **B** He hid Grandpa's slippers.
○ **C** He hid Grandpa's toolbox up in the attic.
○ **D** He stole Grandpa's wristwatch.

c) Why was Grandpa's watch special to him?

○ **A** Peter's parents gave it to him for his birthday.
○ **B** Grandma gave it to him on their 40th anniversary.
○ **C** He received it when he retired.
○ **D** He won it in a contest.

d) Why was Peter nervous and unable to sleep?

○ **A** He had failed his math test.
○ **B** He had an appointment with the dentist.
○ **C** He had a fight with his friends.
○ **D** He was waiting for Grandpa to strike back at him.

e) Why did Grandpa give back the Monopoly pieces and cards?

○ **A** The war was over.
○ **B** Peter knew where Grandpa was hiding them.
○ **C** Jenny discovered they were missing.
○ **D** He felt sorry for Peter.

© CLASSROOM COMPLETE PRESS

After You Read NAME: _____

Chapters Thirty-one to Thirty-four

1. Sometimes when we receive information we form conclusions too quickly. Then it turns out that our conclusions are false. Read the situations described below and then add a conclusion.

   a) Just because Grandpa has a devilish plan to get even doesn't mean _____

   _____

   b) Just because Peter's friends think Grandpa's plan was great doesn't mean _____

   _____

   c) Just because Peter was playing the "waiting game" with Grandpa doesn't mean _____

   _____

   d) Just because Peter felt he had played the best trick to win doesn't mean _____

   _____

2. **Put a check mark (✓) next to the answer that is most correct.**

   a) Grandpa's revenge was...

   ○ **A** not very well thought out.
   ○ **B** full of problems for Peter.
   ○ **C** easy to overcome.
   ○ **D** supported by Jenny.

   b) Why does Peter decide to play a really mean trick on Grandpa?

   ○ **A** He likes playing mean tricks.
   ○ **B** He thought Grandpa would apologize.
   ○ **C** His friends told him to.
   ○ **D** He still wanted Grandpa to give up.

NAME: _____

Chapters Thirty-five to Thirty-seven

1. **Number the events from 1 to 7 in the order they happened in these Chapters.**

- ( ) a) Peter moved back into his old room.
- ( ) b) Dad agreed to move his office upstairs.
- ( ) c) Grandpa had to convince Dad to agree to the plan.
- ( ) d) Grandpa moved into his new room.
- ( ) e) Grandpa and Peter went down to check out the basement.
- ( ) f) Grandpa made Peter a special sign that said PETE'S PLACE.
- ( ) g) Peter chose to stay home with Grandpa while his parents went shopping.

2. **Circle T if the statement is TRUE or F if it is FALSE.**

T F a) Peter wanted to start the war again.

T F b) Grandpa doesn't know what they are going to do.

T F c) Grandpa's new room is in the basement.

T F d) Grandpa used to build houses for a living.

T F e) Dad won't agree to move his office.

T F f) Everyone is happy with their new rooms.

© CLASSROOM COMPLETE PRESS